AGENDA FOR THE REGULAR MEETING OF THE
BRENTWOOD BOARD OF ZONING APPEALS
Monday, August 17, 2026 -- 5:30PM
BRENTWOOD CITY HALL

Call to Order
Roll Call
Pledge of Allegiance to the Flag

Approval or Correction of Minutes

1. July 20, 2026

Comments from Citizens - *Public comments will be allowed on all agenda items. Upon being recognized by the Chair, any person wishing to speak shall state his/her name and address and shall limit comments to the agenda item being discussed. A sign-in sheet will be provided fifteen (15) minutes prior to the start of the meeting. Anyone wishing to speak may, but are not required to, sign in.*

Regular Agenda

1. **BZA2607-001 Accessory Structure Request - Crockett Hills Subdivision, Section 3, Lot 54, 8300 Alamo Road, Zoning R-2** - *Applicant: Mark Van Atta*

Allison Roberts

Allison Roberts
Planner

Anyone requesting accommodations due to disabilities should contact April Curlin, ADA Coordinator, before the meeting at 615-371-0060.

BZA **1.**

Meeting Date: 08/17/2026

Information

PROJECT NUMBER

Meeting Minutes - July 20, 2026

PROJECT DESCRIPTION

Approval or correction of minutes from the July 20, 2026 meeting.

ZONING OF PROPERTY

APPLICANT NAME/ADDRESS

Attachments

Meeting Minutes -- July 17, 2026

D R A F T

MINUTES OF MEETING OF BRENTWOOD BOARD OF ZONING APPEALS

BRENTWOOD, TENNESSEE

The Brentwood Board of Zoning Appeals met on Monday, July 20, 2026 at 5:30 pm at Brentwood City Hall.

Present:	Todd Lockhart; David Carden; Debbie Sheridan; Todd Spillane
Staff Present:	Allison Roberts, Jackson Reid

Approval or Correction of Minutes

June 15, 2026

Moved by David Carden for approval of the minutes as written, seconded by Debbie Sheridan

Vote: 4 - 0 Approved - Unanimously

Regular Agenda

BZA2605-002 Accessory Structure Request - Annandale Subdivision, Section 8, Lot 64, 9238 Carrisbrook Lane, Zoning OSRD - *Applicant: New Beginnings Landscape*

New Beginnings Landscape requested approval of a 520 square foot detached structure to be constructed in the rear buildable area of the lot. The structure will be constructed of board and batten siding with stone accents that compliment the existing house. It will have a shingle roof and be approximately 17 feet tall.

The department recommended that the following 4 requirements be attached to the approval of the request:

1. Except on parcels of three or more acres in size, no accessory building shall be designed and/or used for living or sleeping quarters. If proposed, this would require a separate BZA review and approval.

2. Accessory structures cannot be used for home occupation/commercial purposes.

3. Complete plans shall be submitted for review, approval, and issuance of a building permit.

4. Any changes to the building or site plans will require staff review and re-approval from the Board of Zoning Appeals prior to issuance of a building permit.

Staff recommended approval of the detached accessory structure, subject to all building codes and staff

notes.

Moved by Debbie Sheridan for approval, seconded by David Carden

Vote: 4 - 0 Approved - Unanimously

BZA2605-003 Accessory Structure Request - Heathrow Hills Subdivision, Lot 23, 5212 Harpeth Ridge Drive, Zoning R-2 - *Applicant: Hardscape Contractors LLC*

Hardscape Contractors LLC requested approval of a 470 square foot detached structure to be constructed in the rear buildable area of the lot. The structure will be constructed of hardie-board siding painted tan to match the trim of the house with stone accents. It will have a shingle roof and be approximately 23 feet tall. The total height of the structure will be approximately 16 feet tall and will be placed on a 7-foot-tall retaining wall.

The department recommended that the following 4 requirements be attached to the approval of the request:

1. Except on parcels of three or more acres in size, no accessory building shall be designed and/or used for living or sleeping quarters. If proposed, this would require a separate BZA review and approval.

2. Accessory structures cannot be used for home occupation/commercial purposes.

3. Complete plans shall be submitted for review, approval, and issuance of a building permit.

4. Any changes to the building or site plans will require staff review and re-approval from the Board of Zoning Appeals prior to issuance of a building permit.

Staff recommended approval of the detached accessory structure, subject to all building codes and staff notes.

Moved by Todd Spillane for approval, seconded by David Carden

Vote: 4 - 0 Approved - Unanimously

BZA2605-006 Accessory Structure Request - Telluride Subdivision, Phase 2, Lot 16, 9909 Elland Road, Zoning R-2 - *Applicant: D2 Pools*

D2 Pools requested approval of a 735 square foot detached structure to be constructed in the rear buildable area of the lot. The structure will be constructed of hardie-board siding painted white to match the existing house, brick skirting, and wood accents. It will have a shingle roof and be approximately 22 feet tall.

The department recommended that the following 4 requirements be attached to the approval of the request:

1. Except on parcels of three or more acres in size, no accessory building shall be designed and/or used for living or sleeping quarters. If proposed, this would require a separate BZA review and approval.

2. Accessory structures cannot be used for home occupation/commercial purposes.

3. Complete plans shall be submitted for review, approval, and issuance of a building permit.

4. Any changes to the building or site plans will require staff review and re-approval from the Board of Zoning Appeals prior to issuance of a building permit.

Staff recommended approval of the detached accessory structure, subject to all building codes and staff notes.

Moved by Todd Spillane with the condition of no rough-ins for a washer and dryer be allowed, seconded by David Carden

Vote: 4 - 0 Approved - Unanimously

BZA2606-001 Revised Accessory Structure Request - Willowmet Subdivision, Section 1, Lot 101, 2000 Willowmet Lane, Zoning OSRD- *Applicant: United Veterans Construction Inc.*

United Veterans Construction requested approval of a 750 square foot detached structure to be constructed in the rear buildable area of the lot. The structure will be constructed of brick that matches the existing house. It will have a shingle roof and be approximately 25 feet tall.

The Board of Zoning Appeals previously approved a 748 square foot, two-story accessory structure on November 7, 2025. The resident did not gain approval from the HOA and had to revise the appearance of the proposed structure.

The department recommended that the following **5** requirements be attached to the approval of the request:

1. An as-built survey will be required prior to final inspection and issuance of a Certificate of Completion.

2. Except on parcels of three or more acres in size, no accessory building shall be designed and/or used for living or sleeping quarters. If proposed, this would require a separate BZA review and approval.

3. Accessory structures cannot be used for home occupation/commercial purposes.

4. Complete plans shall be submitted for review, approval, and issuance of a building permit.

5. Any changes to the building or site plans will require staff review and re-approval from the Board of Zoning Appeals prior to issuance of a building permit.

Staff recommended approval of the detached accessory structure, subject to all building codes and staff notes.

Moved by David Carden for approval, seconded by Debbie Sheridan

Vote: 4 - 0 Approved - Unanimously

With no further business, the meeting adjourned at 5:48pm.

APPROVED _____ Allison Roberts

Allison Roberts, City Planner

BZA **1.**

Meeting Date: 08/17/2026

Current Zoning: R-2 - SUBURBAN RESIDENTIAL

Information

Subject

BZA2607-001 Accessory Structure Request - Crockett Hills Subdivision, Section 3, Lot 54, 8300 Alamo Road, Zoning R-2 - *Applicant: Mark Van Atta*

General Information

Mark Van Atta requests approval of a 708 square foot detached structure to be constructed in the rear buildable area of the lot. The structure will be constructed of hardie-board siding painted to match the existing house. It will have a shingle roof and be approximately 17.5 feet tall. The height of the house is approximately 27 feet tall.

Condition of Approval

The department recommends that the following **5** requirements be attached to the approval of the request:

1. An as-built survey will be required prior to final inspection and issuance of a Certificate of Completion.

2. Except on parcels of three or more acres in size, no accessory building shall be designed and/or used for living or sleeping quarters. If proposed, this would require a separate BZA review and approval.

3. Accessory structures cannot be used for home occupation/commercial purposes.

4. Complete plans shall be submitted for review, approval, and issuance of a building permit.

5. Any changes to the building or site plans will require staff review and re-approval from the Board of Zoning Appeals prior to issuance of a building permit.

Recommendation

Staff recommends approval of the detached accessory structure, subject to all building codes and staff notes.

Attachments

Proposed Site Plan

Proposed Building Elevations

STANDARD EROSION AND SEDIMENT CONTROL NOTES

1. THE CONTRACTOR SHALL BE SUBJECT TO AND FOLLOW ANY STATE, COUNTY OR CITY STORM WATER ORDINANCE FOR GRADING, EROSION AND SEDIMENT CONTROL FOR THE MEASURES SHOWN OR STATED ON THIS PLAN.
2. CONTRACTOR MUST ENSURE THAT THE CONSTRUCTION SITE IS PREPARED PRIOR TO THE ONSET OF ANY STORM. CONTRACTOR SHALL HAVE ALL EROSION AND SEDIMENT CONTROL MEASURES IN PLACE FOR THE WINTER MONTHS PRIOR TO OCTOBER 1.
3. ALL EROSION AND SEDIMENT CONTROL MEASURES SHALL BE MAINTAINED UNTIL DISTURBED AREAS ARE STABILIZED. CHANGES TO THIS EROSION AND SEDIMENT CONTROL PLAN SHALL BE MADE TO MEET FIELD CONDITIONS ONLY WITH THE APPROVAL OF OR AT THE DIRECTION OF A REPRESENTATIVE OF THE APPROPRIATE GOVERNING DEPARTMENT.
4. DUE TO UNANTICIPATED FIELD CONDITIONS, THIS PLAN MAY NOT COVER ALL SITUATIONS THAT ARISE DURING CONSTRUCTION. VARIATIONS MAY BE MADE TO THE PLAN IN THE FIELD SUBJECT TO THE APPROVAL OR AT THE DIRECTION OF A REPRESENTATIVE OF THE APPROPRIATE GOVERNING DEPARTMENT.
5. ALL EROSION AND SEDIMENT CONTROL MEASURES SHALL BE CHECKED BEFORE AND AFTER ALL STORMS TO ENSURE MEASURES ARE FUNCTIONING PROPERLY.
6. THE CONTRACTOR SHALL BE RESPONSIBLE FOR MAINTAINING A LOG AT THE SITE OF ALL INSPECTIONS OR MAINTENANCE OF EROSION AND SEDIMENT CONTROL MEASURES, AS WELL AS, ANY CORRECTIVE CHANGES TO EROSION AND SEDIMENT CONTROL MEASURES OR EROSION AND SEDIMENT CONTROL PLAN.
7. IN AREAS WHERE SOIL IS EXPOSED. PROMPT REPLANTING WITH NATIVE I COMPATIBLE DROUGHT–RESISTANT VEGETATION SHALL BE PERFORMED. NO AREAS WILL BE LEFT EXPOSED OVER THE WINTER SEASON.
8. THE CONTRACTOR SHALL INSTALL THE STABILIZED CONSTRUCTION ENTRANCE PRIOR TO COMMENCEMENT OF GRADING. LOCATION OF THE ENTRANCE MAY BE ADJUSTED BY THE CONTRACTOR TO FACILITATE GRADING OPERATIONS. ALL CONSTRUCTION TRAFFIC ENTERING THE PAVED ROAD MUST CROSS THE STABILIZED CONSTRUCTION ENTRANCE. THE STABILIZED CONSTRUCTION ENTRANCE SHALL REMAIN IN PLACE UNTIL THE ROAD BASE ROCK COURSE IS COMPLETED.
9. ALL SEDIMENT DEPOSITED ON PAVED ROADWAYS SHALL BE SWEPT AT THE END OF EACH WORKING DAY OR AS NECESSARY.
10. CONTRACTOR SHALL PLACE EROSION CONTROL MEASURES AROUND ALL NEW DRAINAGE STRUCTURE OPENINGS IMMEDIATELY AFTER THE STRUCTURE OPENING IS CONSTRUCTED. THESE EROSION CONTROL MEASURES SHALL BE MAINTAINED AND REMAIN IN PLACE UNTIL CONSTRUCTION IS COMPLETED.
11. CONTRACTOR SHALL IMPLEMENT HOUSEKEEPING PRACTICES AS FOLLOWS:

A. CONCRETE WASTE:
PROVIDE A DESIGNATED AREA FOR A TEMPORARY PIT TO BE USED FOR CONCRETE TRUCK WASH–OUT. DISPOSE OF HARDENED CONCRETE OFFSITE. AT NO TIME SHALL A CONCRETE TRUCK DUMP ITS WASTE AND CLEAN ITS TRUCK INTO THE CITY STORM DRAIN VIA CURB AND GUTTER INLETS. INSPECT DAILY TO CONTROL RUNOFF AND WEEKLY FOR REMOVAL OF HARDENED CONCRETE.

B. PAINT AND PAINTING SUPPLIES:
PROVIDE INSTRUCTION TO EMPLOYEES AND SUBCONTRACTOR REGARDING REDUCTION OF POLLUTANTS INCLUDING MATERIA STORAGE, USE AND CLEAN UP. INSPECT SITE WEEKLY FOR EVIDENCE OF IMPROPER DISPOSAL.

C. HAZARDOUS WASTE MANAGEMENT:
PREVENT THE DISCHARGE OF POLLUTANTS FROM HAZARDOU WASTES TO THE DRAINAGE SYSTEM THROUGH PROPER MATERIA USE, WASTE DISPOSAL AND TRAINING OF EMPLOYEES. HAZARDOUS WASTE PRODUCTSCOMMONLY FOUND ON–SITE ARE, BUT NOT LIMITED TO PAINTS & SOLVENTS, PETROLEUM PRODUCTS, FERTILIZERS HERBICIDES & PESTICIDES, SOIL STABILIZATION PRODUCTS, ASPHALT PRODUCTS AND CONCRETE CURING PRODUCTS. SPECIAL CARE MUST.

12. STABILIZATION MEASURES MUST BE PERFORMED WITHIN THREE (3) DAYS IN PORTIONS OF THE SITE WHERE CONSTRUCTION ACTIVITIES HAVE TEMPORARILY OR PERMANENTLY CEASED, AND WITHIN FIFTEEN (15) DAYS AFTER FINAL GRADING OR PRIOR TO FINAL INSPECTIONS. (STABILIZATION PRACTICES MAY INCLUDE: TEMPORARY OR PERMANENT SEEDING WITH MULCH, MATTING, OR SOD STABILIZATION)
13. STRUCTURAL PRACTICES TO DIVERT OR STORE FLOWS FROM AREAS OF LAND DISTURBANCE OR OTHERWISE LIMIT RUNOFF AND THE DISCHARGE OF POLLUTANTS FROM EXPOSED AREAS OF THE SITE MUST BE IMPLEMENTED, SUCH PRACTICES MAY INCLUDE SILT FENCES, EARTH DIKES, DRAINAGE SWALES, SEDIMENT TRAPS, CHECK DAMS, SUBSURFACE DRAINS, PIPE SLOPE DRAINS, STORM DRAIN INLET PROTECTION, ROCK OUTLET PROTECTION, REINFORCED SOIL RETAINING SYSTEMS, AND GABIONS.
14. INSPECTIONS OF ALL CONTROL MEASURES AND DISTURBED AREAS MUST BE PERFORMED TWICE WEEKLY. INSPECTIONS MUST BE DOCUMENTED AND INCLUDE THE DATE OF THE INSPECTION AND MAJOR OBSERVATIONS. BASED ON THE REULTS OF INSPECTIONS, ANY INADEQUATE CONTROL MEASURES IN DISREPAIR MUST BE REPLACED OR MODIFIED, OR REPAIRED AS NECESSARY, WITHIN ONE DAY AFTER THE NEED IS IDENTIFIED.

PRESERVING EXISTING VEGETATION NOTES

1. WHENEVER POSSIBLE, PRESERVE EXISTING TREES, SHRUBS, AND OTHER VEGETATION.
2. TO PREVENT ROOT DAMAGE, DO NOT GRADE, PLACE SOIL PIPES, OR PARK VEHICLES NEAR TREES MARKED FOR PRESERVATION.

REVEGETATION NOTES

DISTURBED SOILS SHALL BE STABILIZED AS QUICK AS PRACTICABLE WITH TEMPORARY VEGETATION AND/OR MULCHING TO PROTECT EXPOSED CRITICAL AREAS DURING DEVELOPMENT. TEMPORARY MULCH IS TO BE APPLIED AT THE RATE OF 2–3 BALES OF STRAW PER 1,000 SQ. FT.
* NOT REQUIRED, BUT HIGHLY RECOMMENDED
* INSTALL AS SOON AS GUTTERS AND DOWN SPOUTS ARE COMPLETED
* ROUTE WATER TO A GRASSED AREA
* MAINTAIN UNTIL A LAWN IS ESTABLISHED

DURING
EXISTING TREES OUTSIDE LIMITS OF GRADING TO REMAIN
POST
ALL DISTURBED AREA TO BE SEEDED AND STRAWED OR SOD APPLIED.

POST CONSTRUCTION AND SLOPE STABILIZATION NOTES

3:1 SLOPES SHOWN HEREON TO BE SODDED FOR STABILIZATION
2:1 SLOPES SHOWN HEREON TO BE STABILIZED WITH NORTH AMERICAN GREEN SC150 EROSION CONTROL BLANKET OR APPROVED SUBSTITUTE STAPLE PATTERN "D"

NOTICE EXTRA MEASURES MAY BE NEEDED IF YOUR SITE:
–IS WITHIN 300 FEET OF A STREAM OR WETLAND
–IS WITHIN 1,000 FEET OF A LAKE
–IS STEEP (SLOPE OF 12% OR MORE)
–RECEIVES RUN OFF FROM 10,000 SQ. FT. OR MORE OF ADJACENT LAND.
–HAS MORE THAN AN ACRE OF DISTURBED GROUND.

BRENTWOOD CRITICAL EROSION CONTROL NOTES:

1. STABILIZATION MEASURES MUST BE PERFORMED WITHIN THREE (3) DAYS IN PORTIONS OF THE SITE WHERE CONSTRUCTION ACTIVITIES HAVE TEMPORARILY OR PERMANENTLY CEASED, WITHIN FIFTEEN (15) DAYS AFTER FINAL GRADING OR PRIOR TO FINAL.
INSPECTION (STABILIZATION PRACTICES MAY INCLUDE TEMPORARY OR PERMANENT SEEDING WITH MULCH, MATTING, OR SOD STABILIZATION.
2. INSPECTIONS OF ALL CONTROL MEASURES AND DISTRUBED AREAS MUST BE PREFORMED AT LEAST ONCE EVERY THREE DAYS. INSPECTIONS MUST BE DOCUMENTED AND INCLUDE THE DATE OF THE INSPECTION AND MAJOR OBSERVATIONS.
3. BASED ON THE RESULTS OF INSPECTIONS, ANY INADEQUATE CONTROL MEASURES OR CONTROL MEASURES IN DISREPAIR MUST BE REPLACED OR MODIFIED OR REPAIRED AS NECESSARY, WITHIN ONE DAY AFTER THE NEED IS IDENTIFIED.

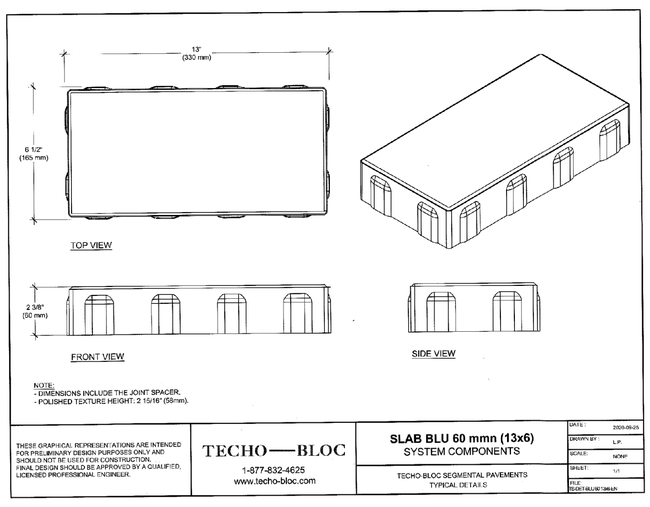

PAVER DETAIL
N.T.S

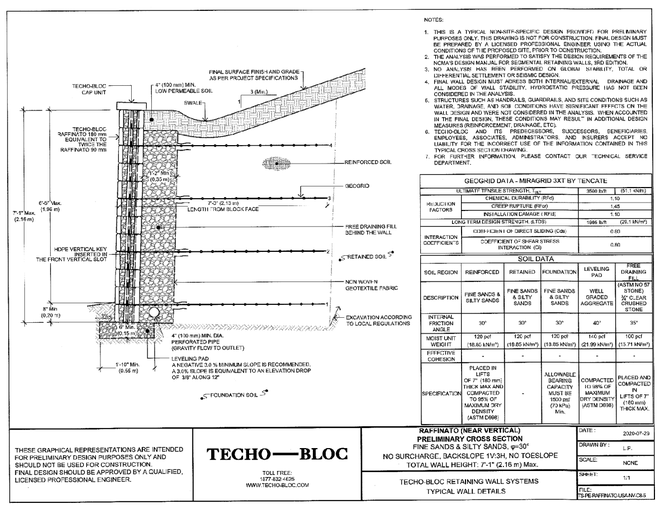

RETAINING WALL DETAIL
N.T.S

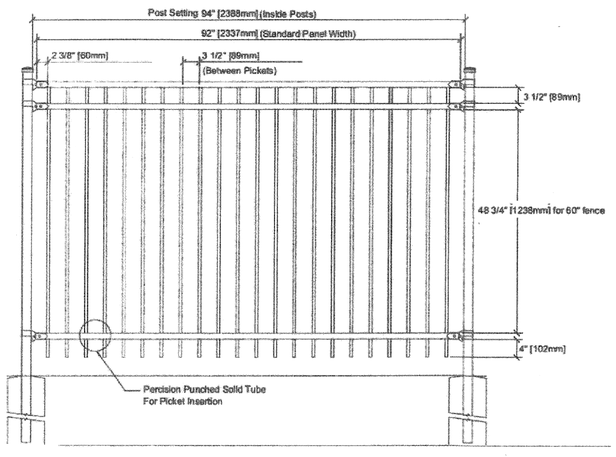

POOL FENCE DETAIL
N.T.S

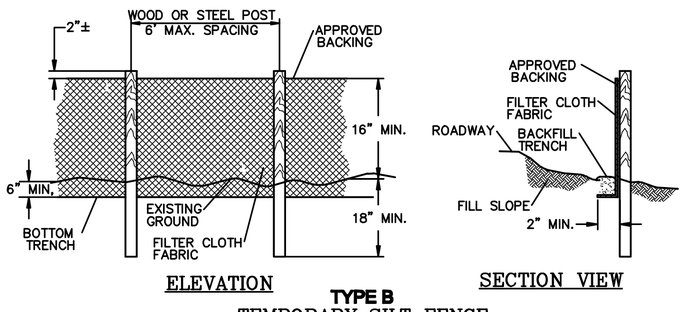

TYPE B
TEMPORARY SILT FENCE
N.T.S
DESIRABLE FOR TRENCH AND FILTER CLOTH

PROPERTY TITLE REFERENCE

PROPERTY BEING PARCEL: 011.00, GROUP: D, TAX MAP: 054B, R.O.W.C. TENN., AND BEING PROPERTY CONVEYED TO MARK VAN ATTA & AMY VAN ATTA, AS RECORDED IN DEED BOOK: 9531, PAGE: 281, R.O.W.C. TENN. AND ALSO BEING LOT NO. 54 CROCKETT HILLS, SECTION III, AS RECORDED IN PLAT BOOK: 6, PAGE: 29 R.O.W.C. TENNESSEE.

GENERAL NOTES:

1. OWNER: MARK VAN ATTA & AMY VAN ATTA.
2. BUILDER: VISION POOLS
3. LOT N0.54 AS SHOWN WAS TAKEN FROM THE FINAL PLAT FOR CROCKETT HILLS SUBD. AS RECORDED IN PLAT BOOK 26, PAGE 29, R.O.W.C. TENN.
4. THIS PROPERTY DOES NOT LIE WITHIN THE 100 YEAR FLOOD ZONE AS EVIDENCED ON F.E.M.A. PANEL 47187C0206G, WILLIAMSON COUNTY, DATED 12/20/24.
5. NO TITLE REPORT FURNISHED THIS SURVEYOR, THEREFORE, THIS PLAN IS SUBJECT TO THE FINDINGS OF AN ACCURATE TITLE SEARCH.
6. EXISTING TOPO SHOWN HEREON IS DERIVED FROM FIELD RUN RANDOM SHOTS AND TIED TO VERTICAL DATUM (NAVD–88), BY DELTA ASSOCIATES. FIELD WORK DONE ON 2/18/25.
7. POOL FOOTPRINT TAKEN FROM FOUNDATION PLAN PROVIDED BY OWNER.
8. A DECK WILL NOT BE ALLOWED OUTSIDE THE LIMITS OF THE BUILDING SETBACK.
9. ALL RETAINING WALLS GREATER THAN 4' WILL BE DESIGNED AND INSPECTED BY A LISCENSED PROFESSIONAL ENGINEER AND CERTIFIED IN WRITING PRIOR TO ISSUANCE OF A CERTIFICATE OF OCCUPANCY.
10. ALL RETAINING WALLS WITH HEIGHT IN EXCESS OF 30" REQUIRE SAFETY RAIL OR BARRIER AS PER BRENTWOOD CODE.
11. THE MAXIMUM GRADE OF ANY PORTION OF A DRIVEWAY SHALL NOT EXCEED 20% FOR PAVED SURFACES AND 10% FOR UN PAVED SURFACES. WITH A MAXIMUM CROSS SLOPE OF 5%. ALL DRIVEWAYS WITH 15% OR GREATER LONGITUDINAL SLOPES AND/OR 5% OR GREATER CROSS–SLOPES SHALL BE PROFILED & SECTIONED BY A TN R.L.S AND APPROVED BY THE CITY ENGINEER PRIOR TO THE ISSUANCE OF A CERTIFICATE OF OCCUPANCY.
12. ALL UTILITIES SHOWN HEREON ARE TAKEN FROM VISIBLE EVIDENCE AT SITE AND FINAL PLAT, LOCATIONS SHOWN ARE APPROXIMATE.
13. BUILDER TO CALL BRENTWOOD ENGINEERING DEPARTMENT FOR INITIAL EROSION CONTROL INSPECTION (615–371–0800) PRIOR TO ISSUANCE OF A PERMIT.
14. DAMAGE TO EXISTING IMPROVEMENTS INSIDE R.O.W. ARE TO BE REPLACED/ REPAIRED PER CITY OF BRENTWOOD STANDARDS.
15. CONTRACTOR TO PROTECT ALL OPEN SPACE DURING CONSTRUCTION.
16. THERE SHALL BE NO STORING OR STAGING OF MATERIALS IN P.U.D.E.,STREET OR PUBLIC RIGHT–OF–WAY.
17. EROSION CONTROL SHALL BE INSTALLED IN ACCORDANCE WITH TENNESSEE DEPARTMENT OF ENVIRONMENT AND CONSERVATION GUIDELINES. GIVEN IN THE CURRENT EDDITION OF THE "SEDIMENT AND EROSION CONTROL HANDBOOK"
18. SETBACKS PER BRENTWOOD CODES DEPARTMENT, BUILDER TO VERIFY SETBACKS PRIOR TO ANY CONSTRUCTION.
19. ANY P.U.D.E. IS REQUIRED TO BE RETURNED TO EXISTING CONDITION AFTER CONSTRUCTION IS COMPLETE.
20. ANY DEVIATION FROM THESE APPROVED PLANS WILL REQUIRE A RESUBMITTAL OF REVISED PLANS FOR APPROVAL. ALL CHANGES SHALL BE SHOWN & CLOUDED. A REVISION LETTER SHALL BE INCLUDED WITH RESUBMITTAL OUTLINING ALL PLAN REVISIONS, FIELD CHANGES ARE NOT PERMITTED ON RESIDENTIAL POOLS. ANY CONSTRUCTION FIELD CHANGE MAY RESULT IN THE CONTRACTOR/APPLICANT BEING REQUIRED TO REMOVE THIS UNAPPROVED CONSTRUCTION.
21. CONSULTANT: GAM ENGINEERING, INC. GREGG CLINGERMAN P.E.
4220 SADDLEBROOKE PLACE HERMITAGE TENN. 37076
gclinger@bellsouth.net
22. CARTRIDGE FILTER. NO REGULAR BACKWASHING REQUIRED. POOL IS SALT SYSTEM. IF DRAINING THE POOL IS EVER REQUIRED. A 30 GPM SUBMERSIBLE PUMP WILL BE RUN TO THE SANITARY SEWER. A FLEXIBLE HOSE SHOULD BE USED FROM THE PUMP TO THE EXISTING SANITARY SEWER CLEANOUT. A 6" AIR GAP SHALL BE MAINTAINED BETWEEN THE HOSE AND THE CLEANOUT. NO HARD CONNECTION TO SANITARY SEWER IS ALLOWED.
23. OUTDOOR HEATED POOLS AND OUTDOOR PERMANENT SPAS SHALL BE PROVIDED WITH A VAPOR–RETARDANT COVER OR OTHER APPROVED VAPOR–RETARDANT MEANS IN ACCORDANCE WITH 104.11.
24. THERE SHALL BE A CLEAR ZONE OF NOT LESS THAN 36" BETWEEN THE EXTERIOR OF THE BARRIER AND ANY PERMANENT STRUCTURE OR EQUIPMENT THAT CAN BE USED TO CLIMB THE BARRIER.
25. PROPOSED FENCE TO COMPLY WITH WILLIAMSON COUNTY SWIMMING POOL FENCE REGULATIONS.
A. MINIMUM 4' HIGH
B. BOTTOM OF FENCE TO BE NO MORE THAN 4" FROM GROUND.
C. OPENINGS IN FENCE SHALL NOT PERMIT THE PASSAGE OF A 4" SPHERE.
D. FENCE TO ENCOMPASS THE POOL AREA TO PREVENT UNAUTHORIZED ENTRY.
26. SW2026–029: APPROVAL OF THE FENCE/GATE DETAILS, POOL, SPA, AND STRUCTURES IS REQUIRED BY THE BUILDING AND CODES DEPARTMENT. RELEASE OF THE GRADING PLAN DOES NOT CONSITUTE APPROVAL OF THESE ITEMS.
27. WHERE A WALL OF A DWELLING OR STRUCTURE SERVES AS PART OF THE BARRIER AND WHERE DOORS OR WINDOWS PROVIDE DIRECT ACCESS TO THE POOL OR SPA THROUGH THAT WALL, ONE OF THE FOLLOWING SHALL BE REQUIRED.
A. OPERABLE WINDOWS HAVING A SILL HEIGHT OF LESS THAN 48" ABOVE THE INDOOR FINISHED FLOOR AND DOORS SHALL HAVE AN ALARM THAT PRODUCES AN AUDIBLE WARNING WHEN THE WINDOW, DOOR OR THEIR SCREENS ARE OPENED. THE ALARM SHALL BE LISTED AND LABELED AS A WATER HAZARD ENTRANCE ALARM IN ACCORDANCE WITH UL2017. THE OPERABLE PARTS OF THE ALARM DEACTIVATION SWITCHES SHALL BE LOCATED 54" OR MORE ABOVE FLOOR.
B. A SAFETY COVER THAT IS LISTED AND LABELED IN ACCORDANCE WITH ASTMF1346 IS INSTALLED FOR THE POOLS AND SPAS.
C. AN APPROVED MEANS OF PROTECTION, SUCH AS SELF–CLOSING DOORS WITH SELF –LATCHING DEVICES, IS PROVIDED. SUCH MEANS OF PROTECTION SHALL PROVIDE A DEGREE OF PROTECTION THAT IS NOT LESS THAN THE PROTECTION AFFORDED BY ITEM A OR B.
28. AN ALARM DEVICE WHICH EMITS A SOUND OF AT LEAST 50dB WHEN A PERSON OR AN OBJECT WEIGHING 15lbs. OR MORE ENTERS WATER IS REQUIRED FOR ANY STRUCTURE THAT IS INTENDED FOR SWIMMING OR RECREATIONAL BATHING AND CONTAINS WATER OVER 36" DEEP, INCLUDING, BUT NOT LIMITED TO, SWIMMING POOLS, HOT TUBS, NONPORTABLE SPAS.
29. 2018 ISPSC 303.1.3 COVERS. OUTDOOR HEATED POOLS AND OUTDOOR PERMANENT SPAS SHALL BE PROVIDED WITH A VAPOR–RETARDANT COVER OR OTHER APPROVED
30. ANY FENCE MODIFICATION INTENDED TO MAKE AN EXISTING FENCE CODE COMPLIANT MUST BE SUBMITTED IN WRITING FOR REVIEW TO COB CODES DEPARTMENT.
31. TEMPORARY CONSTRUCTION ACCESS RUBER MATS TO BE PLACED DAILY AND REMOVED.
32. THIS SUBDIVISION HAS EXISTING DETENTION PONDS DESIGNED TO CONTROL ADDITIONAL STORMWATER RUNOFF, DUE TO HOUSE AND IMPERVIOUS AREA CONSTRUTION.
33. BOTTOM OF WALL (B.W.) SHOWN HEREON IS THE LOWEST FINISHED GRADE AT THE WALL.
34. A SEPARATE RETAINING WALL PERMIT IS REQUIRED,(REGARDLESS OF WALL HEIGHT).
35. DAMAGE TO R.O.W. AND/OR P.U.D.E. SHALL BE REPAIRED TO PRE–CONSTRUCTION CONDITION.
36. ALL SWALES AND GRADED AREAS SHOWN HEREON TO BE SEEDED.
37. ▽ DOWNSPOUT LOCATION.
38. POOL HOUSE AND GARAGE WILL REQUIRE SEPARATE PERMITS.

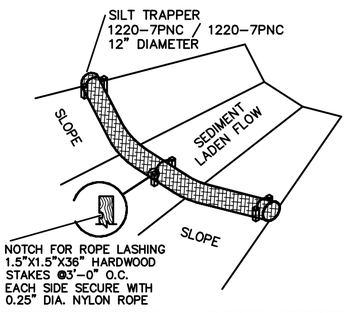

SEDIMENT CONTROL – DITCH CHECK
N.T.S

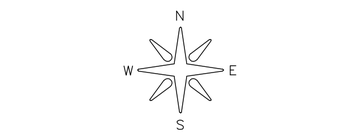

GRAPHIC SCALE
0' 20' 40' 60'
Scale: 1" = 20'

MINIMUM BLDG. SETBACKS
FRONT YARD.....75'
SIDE YARD.....20'
REAR YARD.....30'

TREE TO REMAIN TREE TO BE REMOVED

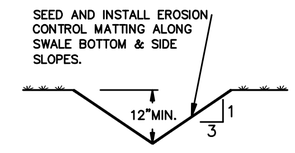

TYPICAL SWALE SECTION
N.T.S

68
RANDY L. CAMPBELL & SUSAN W. CAMPBELL
TAX MAP: 054B, GROUP: D, PARCEL: 00600 R.O.W.C. TN.
DEED BOOK: 5331, PAGE: 946, R.O.W.C., TN.

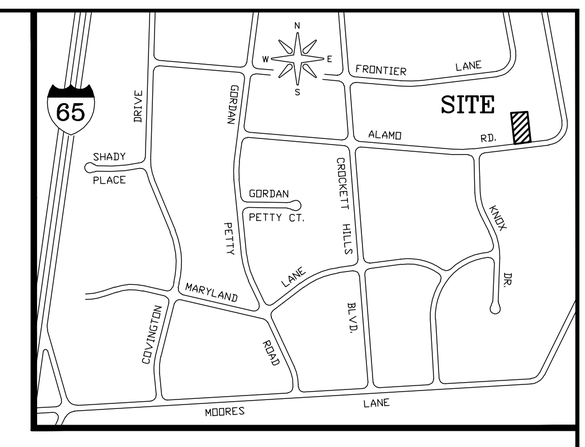

LOCATION MAP
N.T.S.

NOTE:
PRIOR TO THE ISSUANCE OF THE CERTIFICATE OF OCCUPANCY, THIS RESIDENTIAL LOT SHALL HAVE A MINIMUM OF 25 CALIPER INCHES OF TREES PER ACRE.

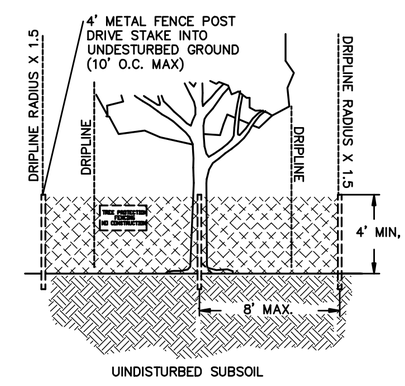

CONTRACTOR RESPONSIBLITY TO AQUIRE TREE REMOVAL PERMITS
TREE PROTECTION FENCING DETAIL
N.T.S

NOTE:
1. ANY REQUIRED EXCAVATION WITHIN THE PROTECTION ZONE SHALL BE EXCAVATED BY HAND.
2. NO STOCKPILING OR STORAGE OF MATERIALS IS PERMITTED WITHIN THE LIMITS OF THE PROTECTION AREA. CONTINUOUS BARRIER OF 4' HIGH CHAIN LINK FENCING WITH TEMPORARY SIGNAGE DELINIATING BOUNDARIES OF TREE PROTECTION FENCING FENCING TO ENCOMPASS THE CRITICAL ROOT ZONE OR 1.5 x THE DRIPLINE OF THE TREE, MIN. 10' SQUARE PROTECTED AREA REQUIRED FILLING MAY BE ALLOWED IN CERTAIN AREAS, SEE GRADING PLANS.

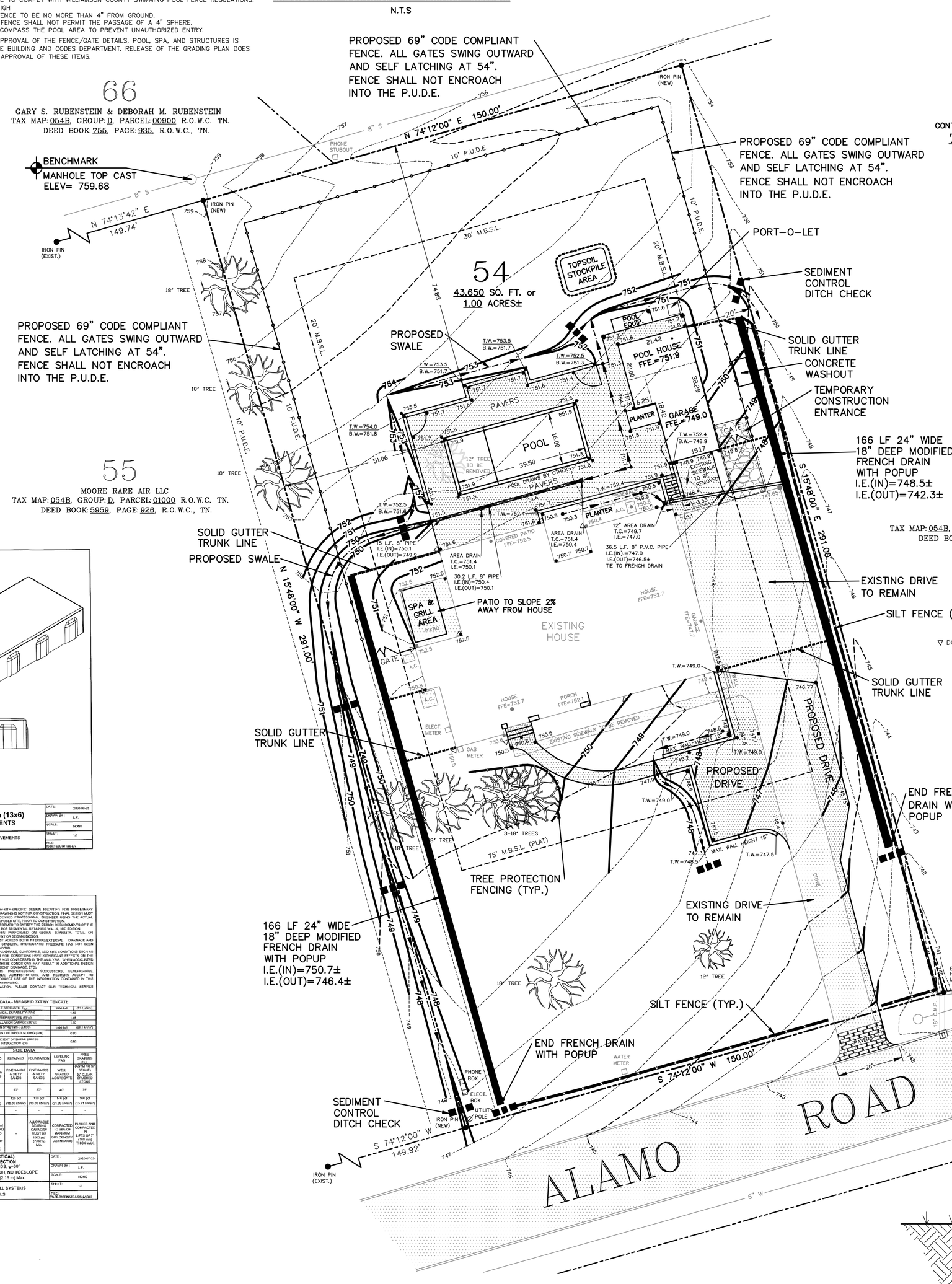

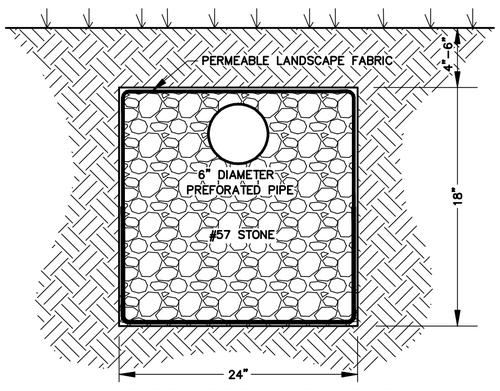

MODIFIED FRENCH DRAIN
(331 L.F. 18" DEEP)
NTS

OWNER: MARK VAN ATTA & AMY VAN ATTA
8300 ALAMO RAOD
BRENTWOOD, TENN. 37027
(615)–405–8167

BUILDER: VISION POOLS AND HARDSCAPES INC.
ATTN: RHEA HUGHES (615) 435–9124
rhea@visionpoolstn.com

CONSULTANT: GAM ENGINEERING INC. (615)–474–7304
4220 SADDLEBROOKE PLACE
HERMITAGE, TN. 37076
ATTN: GREGG M. CLINGERMAN, P.E.
GREGGC@GAM–ENGINEERING.COM

SURVEYOR: DELTA ASSOCIATES INC.
7121 CROSSEOADS BLVD. SUITE 102
BRENTWOOD TENN. 37027
ATTN: TORI CASSIDY (615)–850–3504
TORIC@DELTAASSOCIATESINC.COM

PERMIT HOLDER ACKNOWLEDGEMENT (FOR POOL)

I ACKNOWLEDGE THAT THE CITY ENGINEER MUST APPROVE ANY DEVIATIONS FROM THE APPROVED SITE PLAN. THE CHANGES SHALL BE SUBMITTED ON A REVISED SITE PLAN. VERBAL APPROVAL MAY NOT BE GIVEN.
I ACKNOWLEDGE THAT ALL GRADING AND DRAINAGE AS PER APPROVED SITE PLAN SHALL BE 100% COMPLETE UPON FINAL INSPECTION. CERTIFICATE OF OCCUPANCY WILL NOT BE ISSUED UNTIL 100% COMPLETION IS ACHIEVED.

I, Rhea Hughes HAVE READ AND REVIEWED THIS SITE PLAN.
(PRINT NAME OF POOL CONTRACTOR & OWNER OR BUILDER)
Rhea Hughes 7/25/26
(SIGNATURE OF POOL CONTRACTOR) (DATE OF SIGNATURE)

I, Rhea Hughes HAVE READ AND REVIEWED THIS SITE PLAN.
(PRINT NAME OF POOL CONTRACTOR & OWNER OR BUILDER)
Rhea Hughes 7/25/26
(SIGNATURE OF PERMIT HOLDER, OWNER OR BUILDER) (DATE OF SIGNATURE)

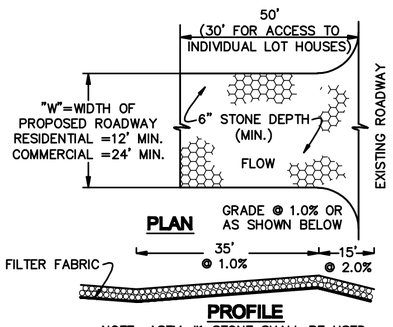

NOTE: ASTM #1 STONE SHALL BE USED
TEMPORARY CONSTRUCTION ENTRANCE DETAIL
N.T.S

SITE CALCULATIONS

LOT AREA = 43,650 SQ. FT. or 1.00 AC
EXISTING HOUSE, PATIO AREA.....4,453 SQ. FT. OR 10.2% OF LOT
EXISTING DRIVE, SIDEWALK.....3,407 SQ. FT.
PROPOSED POOL HOUSE, GARAGE.....723 SQ. FT.
PROPOSED DRIVE, SIDEWALK.....1,655 SQ. FT.
PROPOSED POOL, POOL DECK.....3,089 SQ. FT.

EXISTING IMPERVIOUS AREA.....7,860 SQ. FT. OR 18.0% OF LOT
PROPOSED IMPERVIOUS AREA.....13,327 SQ. FT. OR 30.5% OF LOT
IMPERVIOUS AREA INCREASE.....5,467 SQ. FT.

VEGETATED AREA.....30,323 SQ. FT. OR 69.5% OF LOT

POOL SITE & EROSION CONTROL PLAN
FOR
LOT No.54
CROCKETT HILLS SUBDIVISION
SECTION III
8300 ALAMO ROAD
15th COUNCIL DISTRICT
BRENTWOOD, WILLIAMSON COUNTY, TENNESSEE 37027

REVISED: 5/7/26 (ADDITION SIZE & RETAINING WALL)
REVISED: 6/30/26 (CITY COMMENTS)
REVISED: 7/7/26 (CITY COMMENTS)
REVISED: 7/22/26 (POOL HOUSE LOCATION & CITY COMMENTS)

Delta Associates
INCORPORATED
Design - Surveying
7121 Crossroads Blvd., Brentwood, TN 37027
PHONE: (615) 850–3501

SCALE : 1" = 20'	DRAWN BY TDC	DATE 4/20/26	DRAWING NO.
	CHECKED BY TDC	JOB NO.26–2185CHS–54	1 OF 1

GENERAL NOTES:

- ALL WORK SHALL BE PERFORMED IN ACCORDANCE WITH ALL NATIONAL AND LOCAL CODES, REGULATIONS, AND IBC 2012 WITH LOCAL AMENDMENTS.

- WHILE EVERY ATTEMPT HAS BEEN MADE IN THE PREPARATION OF THIS PLAN TO AVOID ERRORS, OMISSIONS AND MISTAKES, THE DESIGNER CAN NOT GUARANTEE AGAINST HUMAN ERROR. THE CONTRACTOR AND/OR CLIENT SHALL VERIFY ALL CONDITIONS, DIMENSIONS, DETAILS AND SPECIFICATIONS AND BE RESPONSIBLE FOR SAME. THE DESIGNER WILL NOT BE LIABLE FOR ERROR AFTER CONSTRUCTION BEGINS.

- ALL DIMENSIONS ARE TO BE READ OR CALCULATED AND NEVER SCALED. DIMENSIONS SHOWN ARE FROM FACE OF FINISH, UNLESS OTHERWISE NOTED. DIMENSIONS SHOWN FROM AN EXISTING WALL ARE FROM FACE OF EXISTING FINISH OF THAT WALL.

- ALL FOUNDATION AND STRUCTURAL MEMBERS SHOULD BE VERIFIED AND STAMPED BY AN ENGINEER. THE CONTRACTOR IS RESPONSIBLE FOR THE ADJUSTMENT AND VERIFICATION OF ALL STRUCTURAL DETAILS AND CONDITIONS TO MEET ALL LOCAL CODES AND TO INSURE A WELL CONSTRUCTED AND SAFE STRUCTURE.

- IN AREAS WHERE EXPOSED OR IN AREAS OF NEW CONSTRUCTION, INSTALL INSULATION (LOOSE FILL, BATT OR LOW VOC) FOR THE FOLLOWING R-VALUES:
  - ATTIC: R-49
  - VAULTED CEILINGS: R-38
  - EXTERIOR WALLS: R-19
  - BAND JOIST: R-30
  - FLOORS OVER UNHEATED SPACES: R-25
  - BASEMENT WALLS: R-12

- CAULK AROUND DOORS, WINDOWS AND ALL OTHER OPENINGS OF EXTERIOR WALLS OF HEATED AREA.

- THE GC SHALL COORDINATE THE LOCATION AND INSTALLATION OF ALL BUILDING SYSTEMS AND EQUIPMENT. THE GC SHALL COORDINATE WITH ALL BUILDING TRADES TO ASSURE ALL REQUIRED CLEARANCES FOR OPERATIONS AND MAINTENANCE OF ALL EQUIPMENT AS REQUIRED BY CODE.

- ALL DOOR AND WINDOW OPENINGS ARE CENTERED ON WALL OR 4" FROM CORNER UNLESS OTHERWISE SPECIFIED.

- ALL NEW WINDOW SIZES BASED ON ELEVATE WINDOWS AND DOORS BY MARVIN. PRICE REPLACEMENT OF ALL WINDOWS IN HOUSE.

- VERIFY USE OF TEMPERED GLASS AS REQUIRED BY LOCAL CODES BEFORE ORDERING WINDOWS AND DOORS.

- FINISHES TO BE COORDINATED BY OWNER AND COMMUNICATED TO THE GENERAL CONTRACTOR.

AA

CEILING: PAINTED GYPSUM BOARD
FLOOR: NEW CONCRETE FLOORING, TROWELED FINISH
WALLS: PAINTED GYPSUM BOARD
TRIM: 3" PAINTED TRIM AT DOORS AND WINDOWS
1 x 3 BASE TRIM AT FLOOR

CEILING IN GARAGE TO BE VAULTED. FINISH CEILING ALONG LINES OF STRUCTURE.

BB POOL BATH

CEILING: PAINTED GYPSUM BOARD
FLOOR: OUTDOOR PORCELAIN TILE - FLOOR SLOPED TO DRAIN
WALLS: TILES ON WALL TO 4'-6" +/-
USE COVE BASE AT WALL TO FLOOR TRANSITION
PAINTED GYPSUM BOARD ABOVE TILES
TRIM: PAINTED 1 x 3 TRIM AT DOORS AND FLOOR
CABINETS: PAINTED WOOD CABINETS

WINDOW SCHEDULE WINDOW SIZES BASED ON MARVIN WINDOWS, ELEVATE SERIES.

TYPE	QTY.	DESCRIPTION	LOCATION	HEADER
WINDOW A	3	ELDH 3240 - DOUBLE HUNG 2-8 x 3-4 WINDOW	STORAGE/ GARAGE	6'-8" ABOVE STORAGE FLOOR
WINDOW B	1	FIXED WINDOW - 2-0 x 2-6	FRONT OF GARAGE	13'-10" ABOVE GARAGE FLOOR

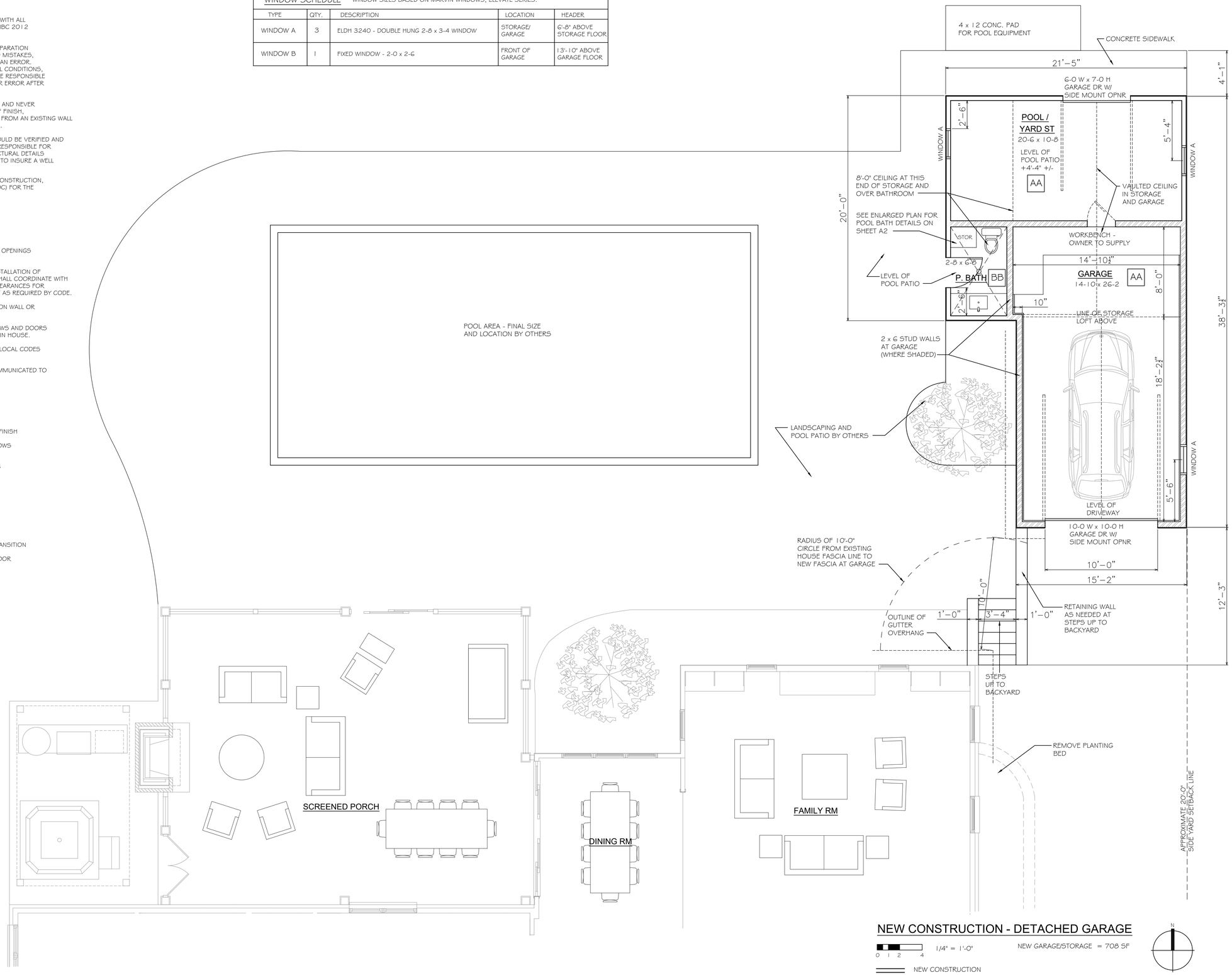

bagwell design

Jennifer Bagwell
residential designer

5031 Marchant Drive
Nashville, TN 37211

615.305.7205
jennifer@bagwelldesign.com

Van Atta Residence

Additions and Renovations to the

8300 Alamo Road, Brentwood, TN 37027

For Construction	07.16.26
For Construction	06.11.26
Construction Rev.	05.07.26
For Review	05.01.26
Pricing Rev.	06.23.25
Pricing Rev.	06.06.25
Prelim. Pricing	05.13.25
For Review	10.29.24
Prelim. Review	10.22.24

NEW CONSTRUCTION DETACHED GARAGE

A1

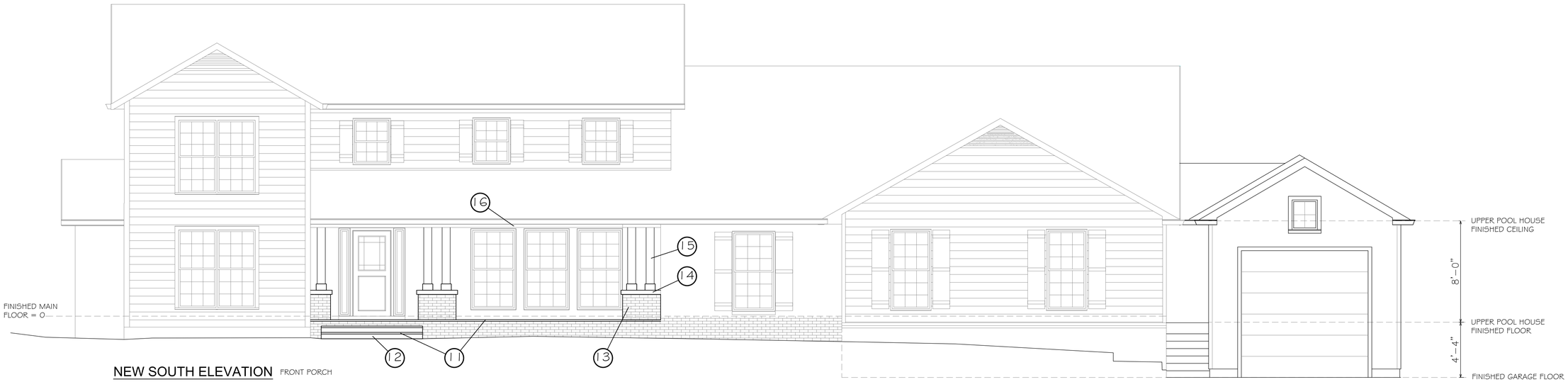

NEW SOUTH ELEVATION FRONT PORCH

1/4" = 1'-0"

POOL HOUSE/GARAGE ELEVATION

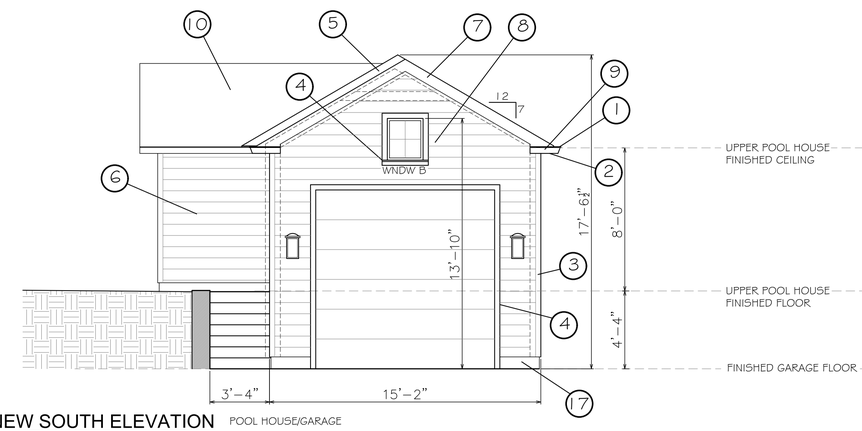

NEW SOUTH ELEVATION POOL HOUSE/GARAGE

1/4" = 1'-0"

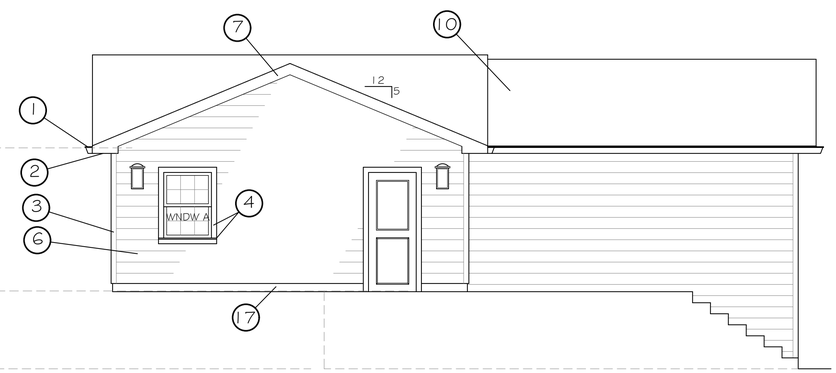

NEW WEST ELEVATION GARAGE/POOL HOUSE

1/4" = 1'-0"

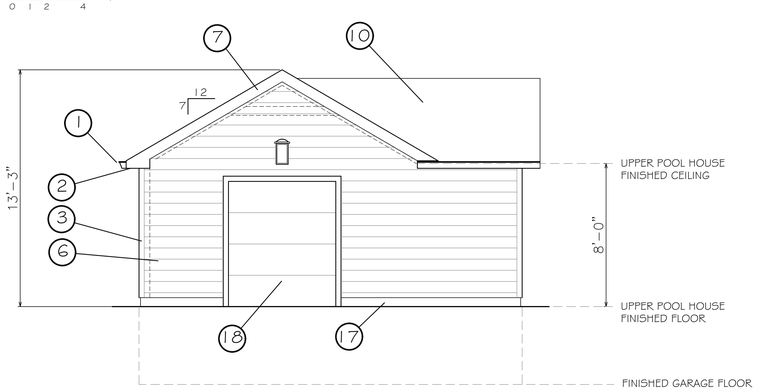

NEW NORTH ELEVATION POOL HOUSE/GARAGE

1/4" = 1'-0"

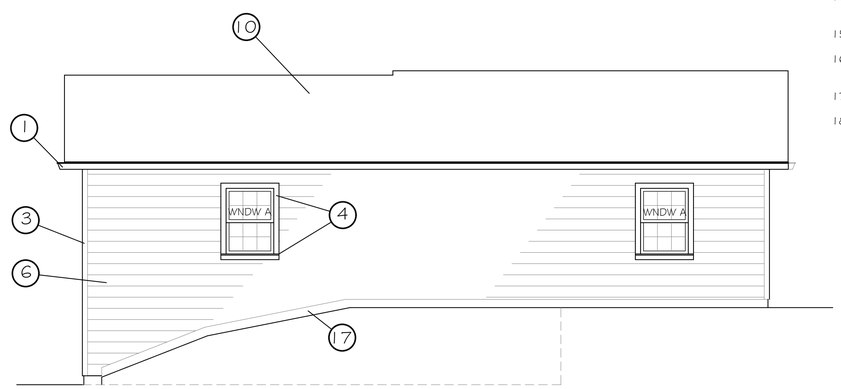

NEW EAST ELEVATION GARAGE/POOL HOUSE

1/4" = 1'-0"

ELEVATION KEYNOTES 1

1. 8" OVERHANG AT SIDES OF GARAGE ROOF. ALUMINUM GUTTERS TO MATCH EXISTING ON HOUSE.
2. PAINTED PVC FASCIA BOARD. FIBER CEMENT SOFFIT MATERIAL TO BE PAINTED.
3. 3 1/2" FIBER CEMENT TRIM AT CORNERS OF GARAGE.
4. 3 1/2" FIBER CEMENT TRIM AT WINDOWS AND DOORS. PVC SILL AT WINDOWS.
5. PVC TRIM BOARD AT ROOF OFFSET.
6. 6" CEMENT FIBER SIDING, SMOOTH FINISH.
7. 7" CEMENT FIBER RAKE BOARD.
8. NEW SHUTTERS TO MATCH STYLE OF EXISTING ON MAIN HOUSE.
9. RETURN GUTTER AT FRONT ELEVATION OF GARAGE AS SHOWN.
10. NEW ARCHITECTURAL STYLE SHINGLES. MATCH EXISTING ROOF AS CLOSELY AS POSSIBLE.
11. BLUESTONE PAVERS AT PORCH AND STEP TREADS.
12. PAINTED BRICK RISERS AT PORCH STEPS.
13. PAINTED BRICK COLUMN BASE - SIZES AS SHOWN
14. PRECAST COLUMN CAP WITH 1" OVERHANG ON ALL EXPOSED SIDES.
15. 8 x 8 STAINED CEDAR WRAPPED POSTS.
16. EXISTING PORCH STRUCTURE TO REMAIN. ADD SUPPORT IF NEEDED TO PORCH FRAME.
17. PAINTED CMU BASE AT GARAGE AND POOL HOUSE.
18. 6'-0" x 7'-0" GARAGE DOOR.

bagwell design

Jennifer Bagwell
residential designer

5031 Marchant Drive
Nashville, TN 37211

615.305.7205
jennifer@bagwelldesign.com

Additions and Renovations to the

Van Atta Residence

8300 Alamo Road, Brentwood, TN 37027

For Construction	06.11.26
Construction Rev.	05.07.26
For Review	05.01.26
Pricing Rev.	06.23.25
Pricing Rev.	06.06.25
Prelim. Pricing	05.13.25

NEW POOL HOUSE EXTERIOR ELEVATIONS

E1